05
SCREW SUPPORTS

www.niasa.ru niasaru@ya.ru +7(499) 350-74-45

“IF YOU WANT A CREATIVE TEAM, GIVE THEM ENOUGH TIME TO PLAY.”

JOHN CLEESE
MEMBER OF MONTY PYTHON.

www.niasa.ru niasaru@ya.ru +7(499) 350-74-45

www.niasa.ru niasaru@ya.ru +7(499) 350-74-45

SCREW SUPPORTS

INTRODUCTION

NIASA SH Series screw supports are a simple and economical solution for mounting a screw on a support and fastening it to any part of a machine. The turn of the screw moves its corresponding nut and with this the desired part of the machine moves (carriages, tables, etc.).

The screw supports are motorized in a very simple way, by motors or motoreducers in different configurations and with different speeds. The power transmission from the motor may be direct or by means of different gear solutions and toothed belts.

Against other systems with pneumatic or hydraulic drives, their main advantages are:

- ... Greater movement and positioning precision.
- ... Superior energy efficiency, as their parts offer high/very high performance, especially with the ball screws, low transmission ratios and high speeds.
- ... Easier and faster assembly, since hydraulic or pneumatic groups are not required, just an electric motor mounted on the unit itself.
- ... Greater reliability and duration, and less maintenance, due to the mechanical robustness and construction simplicity.
- ... Lower size for the same load capacity.
- ... ...

They are also also characterized for offering an extensive range of:

- ... Axial load capacities, from 2.5 kN up to 45 kN.
- ... Nut advance speeds depend on the screw pitch and the transmission used.
- ... Trapezoidal and ball screws, depending on the performance required, precision of the desired movement and positioning, etc.
- ... Fastening accessories and elements, for optimal adaptation to the most varied systems that may be designed.
- ... Drives, with different reduction ratios and positions, which enables the best solution to be offered for any speed and configuration problem. Among these are the following as standard:
  - · Motors / In line motoreducers.
  - · Motors / Motoreduc. in parallel with the toothed belt.
  - · Motors / Motoreducers at 90º.
  - · ...
- ... Materials and surface coverings, depending on the environmental conditions in which the unit will be installed.
- ... ...

Please do not hesitate to contact NIASA if you require screw supports (and their drive mechanisms) with specifications other than those covered in this chapter. The NIASA technical department will specifically develop the special units that best meet your requirements.

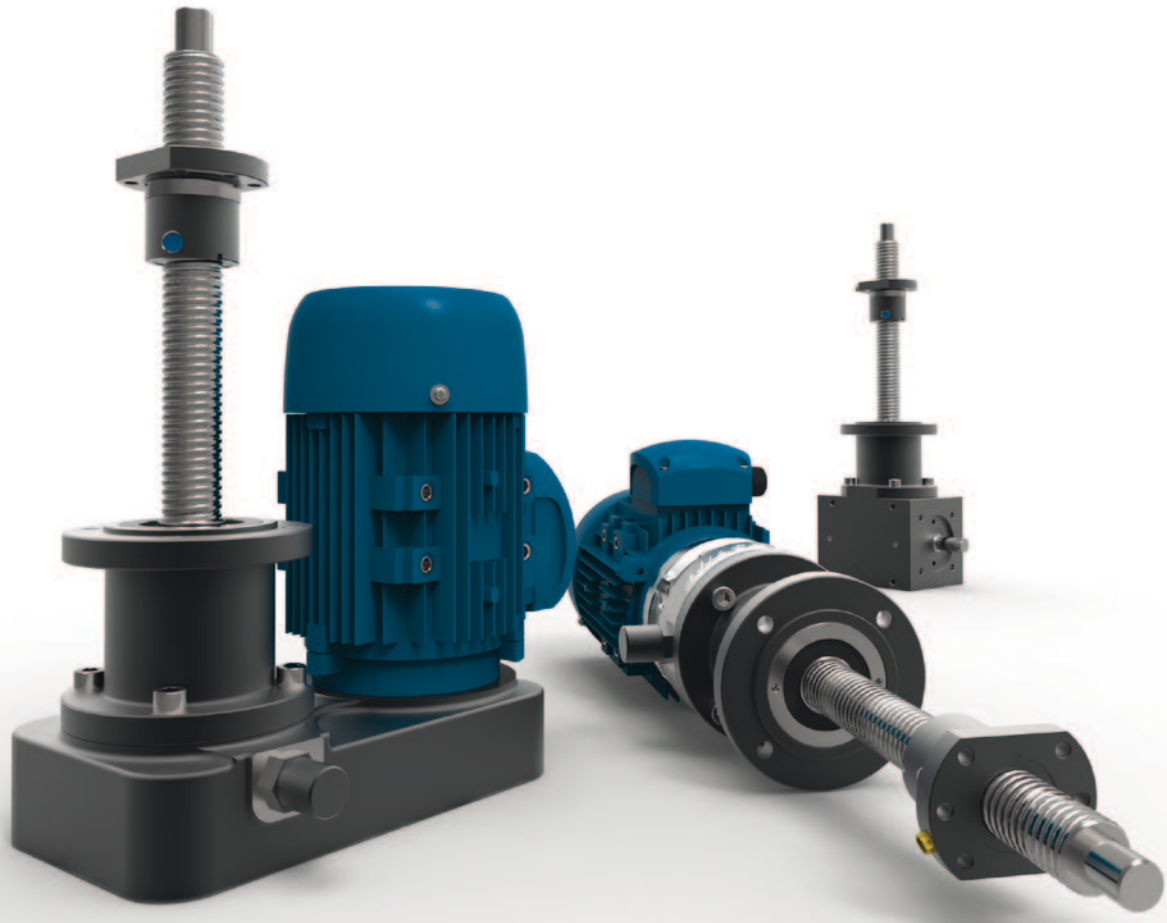

www.niasa.ru niasaru@ya.ru +7(499) 350-74-45

SCREW SUPPORTS
APPLICATIONS

DOOR OPENING/ CLOSING SYSTEMS

SH20 Series screw support made up of a three-phase motor drive system, drive union flange, left-right screw with KGF double ball nut and SP bearing supports.

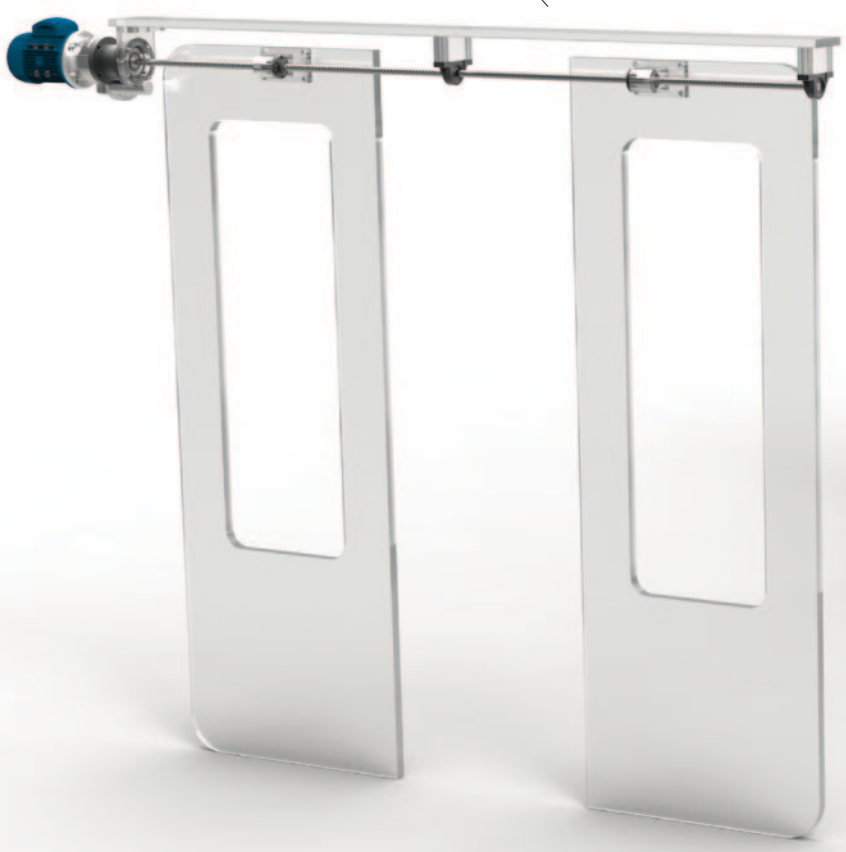

www.niasa.ru niasaru@ya.ru +7(499) 350-74-45

MACHINE TILTING SYSTEM

Set of four SH30 Series screw supports made up of a servomotor drive system and joined together with GX transmission shaft and bevel gearboxes. Screw fastening with BPS flanges, KGF ball nuts, SF Series spiral screw protectors and two electro-magnetic brakes.

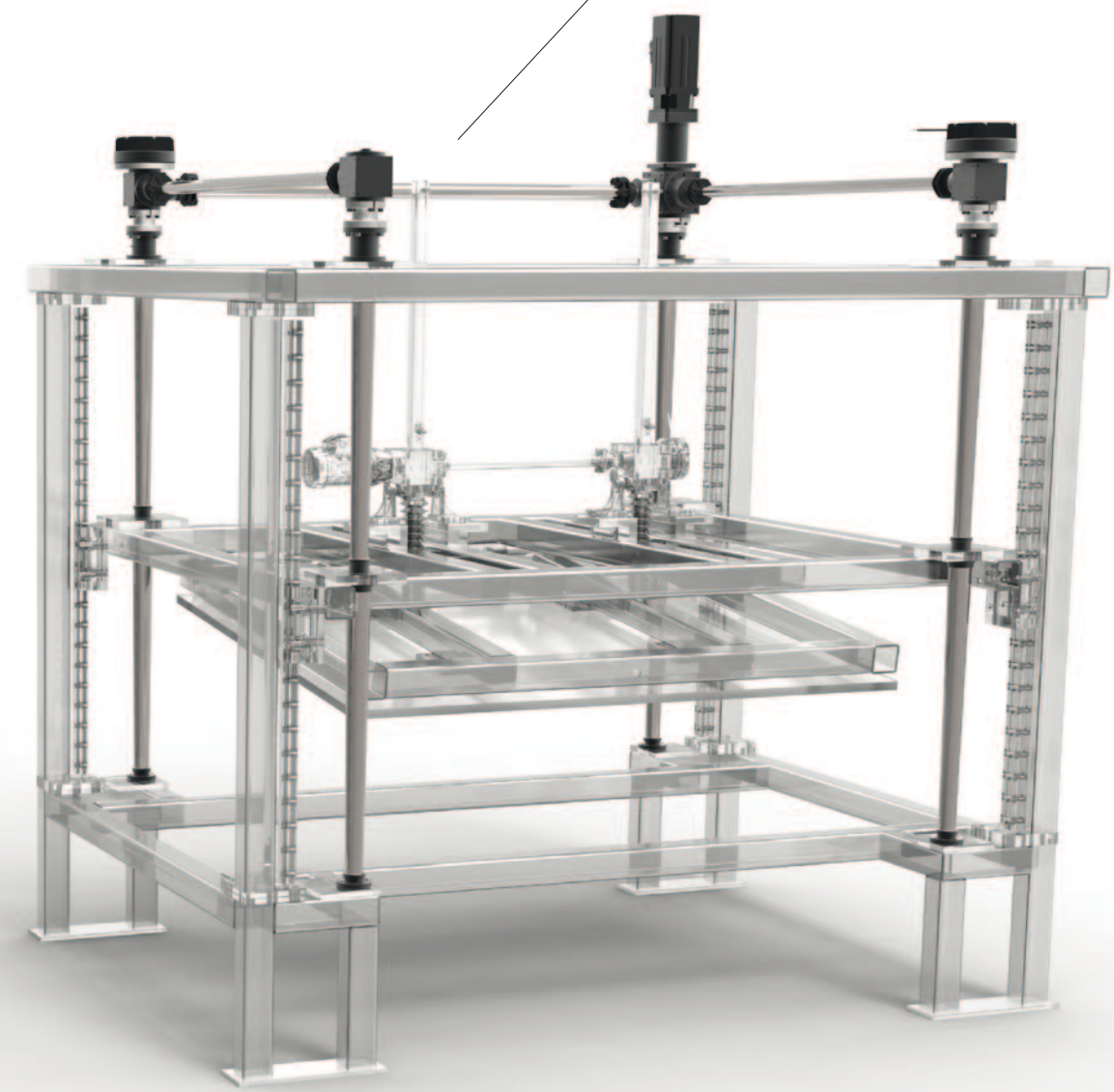

SCREW SUPPORTS
SIZES

For further information about M205/M501/M505/M601/M605 configurations, please contact NIASA.

There are trapezoidal and ball screw options on all sizes (see the chapter about screws for more details).

Up to	SH20 12.5 kN	SH30 25 kN	SH40 45 kN
M100 Basic configuration	 page 186	 page 187	 page 188
M205 In line motoreducer	 page 185	 page 185	 page 185
M501 Parallel drive	 page 185	 page 185	 page 185
M505 For drive at 90°	 page 185	 page 185	 page 185
M601 Motoreducer at 90°	 page 185	 page 185	 page 185
M605 In line motor	 page 185	 page 185	 page 185

In addition to the standard range of screw supports, NIASA can specifically develop the unit that best meets your application requirements. Contact NIASA.

www.niasa.ru niasaru@ya.ru +7(499) 350-74-45

SCREW SUPPORTS

GENERAL PRODUCT OVERVIEW

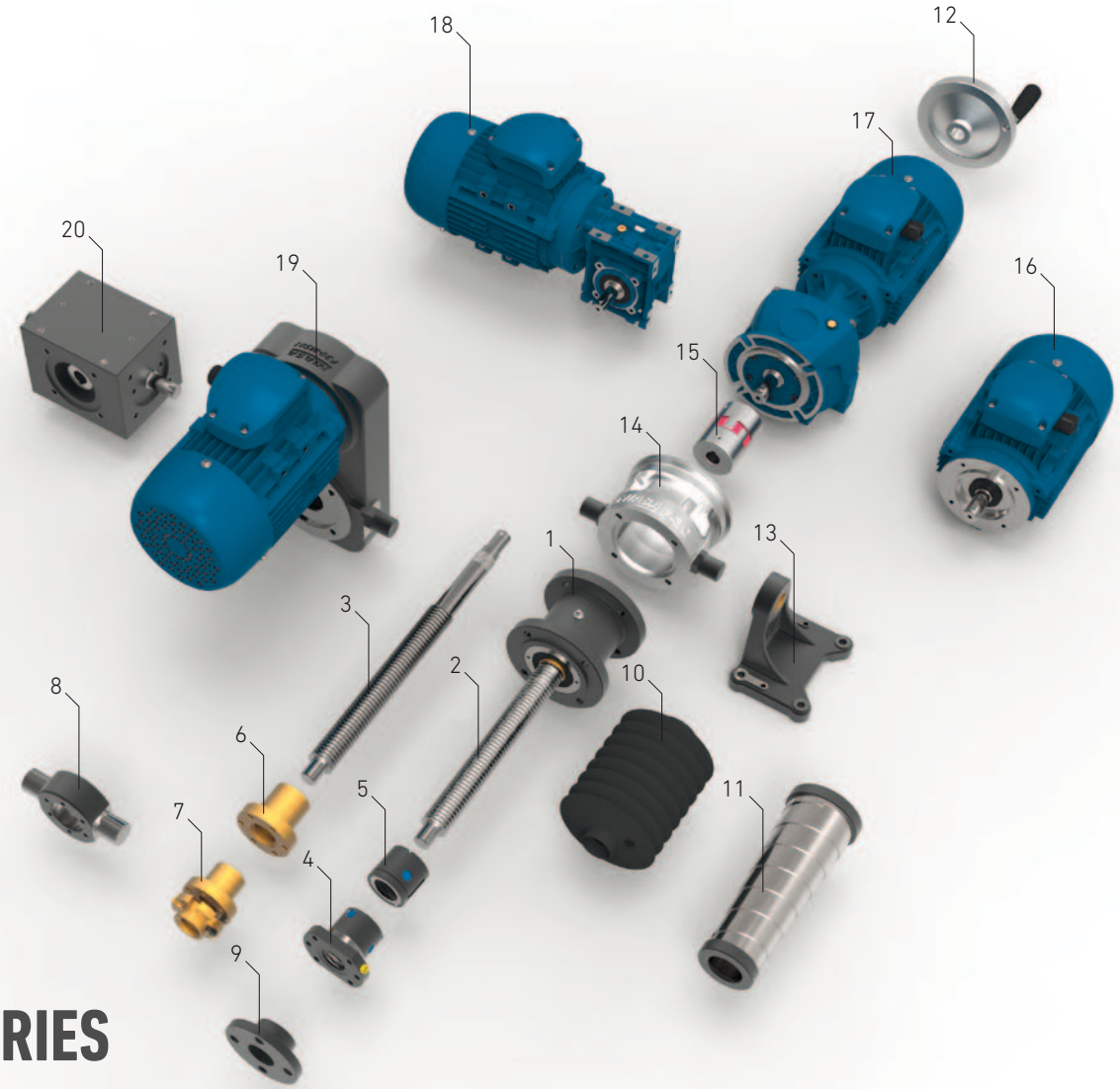

ACCESSORIES

	Name	Page
01	Body	184
02	Ball screw	186
03	Trapezoidal screw	186
04	KGF nut	246
05	KGM nut	248
06	EFM nut	258
07	EFM safety nut	258
08	KAR flange	275
09	BPR flange	279
10	FB protector bellow	301
11	SF protector bellow	302
12	VE wheel	300
13	SB tip support	276

CONFIGURATIONS

	Name	M205	M501	M505	M601	M605
14	F flange	•			•	•
15	EK coupling	•			•	•
16	Motor					•
17	In line motoreducer	•				
18	Motoreducer at 90°				•	
19	Parallel drive		•			
20	90° bevel gearbox			•		

SH20 SCREW SUPPORTS

UP TO 12.5 kN

TRAPEZ. KGS BALLS

The capacities indicated correspond to
the standard input shaft configurations.
Higher capacities are available on request.

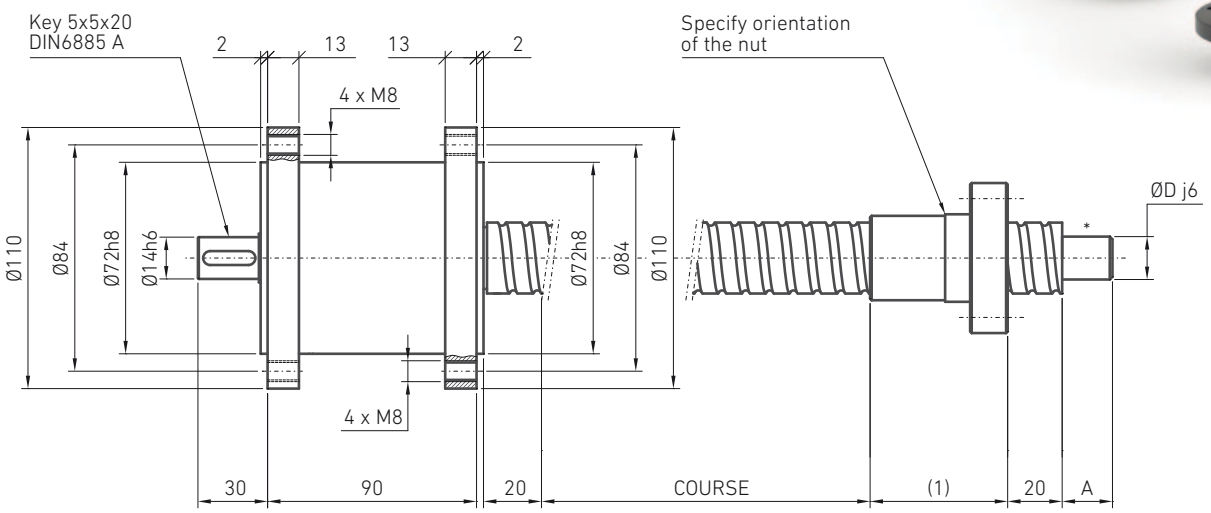

NOTES: (1) See nut dimensions in the corresponding chapter.

Screw diameter and step (mm)	A	øD	Maximum axial strength (kN)	Advance (mm/revol. input)	Performance (%)	Drive torque, M_D (Nm) F (kN), load to move in dynamic	Stroke weight 0 without nut (kg)	Approx. weight each 100 mm of stroke without nut (kg)
Tr 20x4	20	15	12.5	4	36	(1.76xF)+0.5	1.6	0.2
Tr 24x5	20	15	10.2	5	37	(2.15xF)+0.5	1.6	0.29
Tr 30x6	25	20	8.3	6	36	(2.65xF)+0.5	1.6	0.45
KGS 2005	20	15	10.5	5	86	(0.93xF)+0.4	1.6	0.22
KGS 2020	20	15	5.9	20	86	(3.72xF)+0.4	1.6	0.2
KGS 2050	20	15	2.4	50	86	(9.31xF)+0.4	1.6	0.33
KGS 2505	20	15	12.3	5	86	(0.93xF)+0.4	1.6	0.34
KGS 2510	20	15	11.9	10	86	(1.86xF)+0.4	1.6	0.33
KGS 2525	20	15	4.7	25	86	(4.65xF)+0.4	1.6	0.33
KGS 2550	20	15	2.4	50	86	(9.31xF)+0.4	1.6	0.34
KGS 3205	25	20	21.5	5	86	(0.93xF)+0.4	1.6	0.39
KGS 3210	25	20	11.9	10	86	(1.86xF)+0.4	1.6	0.56
KGS 3220	25	20	5.9	20	86	(3.72xF)+0.4	1.6	0.57
KGS 3240	25	20	3.0	40	86	(7.45xF)+0.4	1.6	0.57

... Power required: P_D (kW) = 0,157x M_D (Nm).

... Contact NIASA to ensure the dynamic load does not exceed the critical values indicated, in order to avoid buckling and resonance of the unit. See calculations chapter at the end of the chapter (page 190)."

... The maximum axial force values correspond to the standard NIASA nuts. In some cases they may be increased by using larger, pre-loaded, etc. nuts. Please contact NIASA.

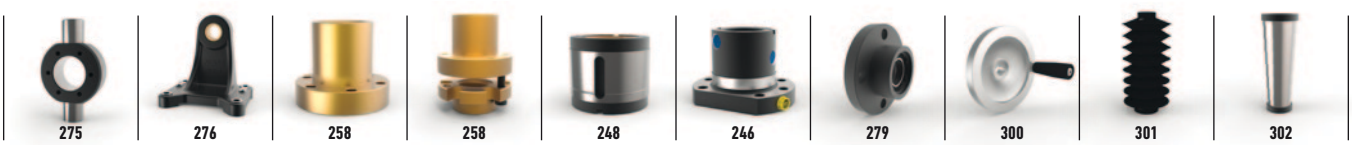

SH30 SCREW SUPPORTS

UP TO 25 kN

The capacities indicated correspond to the standard input shaft configurations. Higher capacities are available on request.

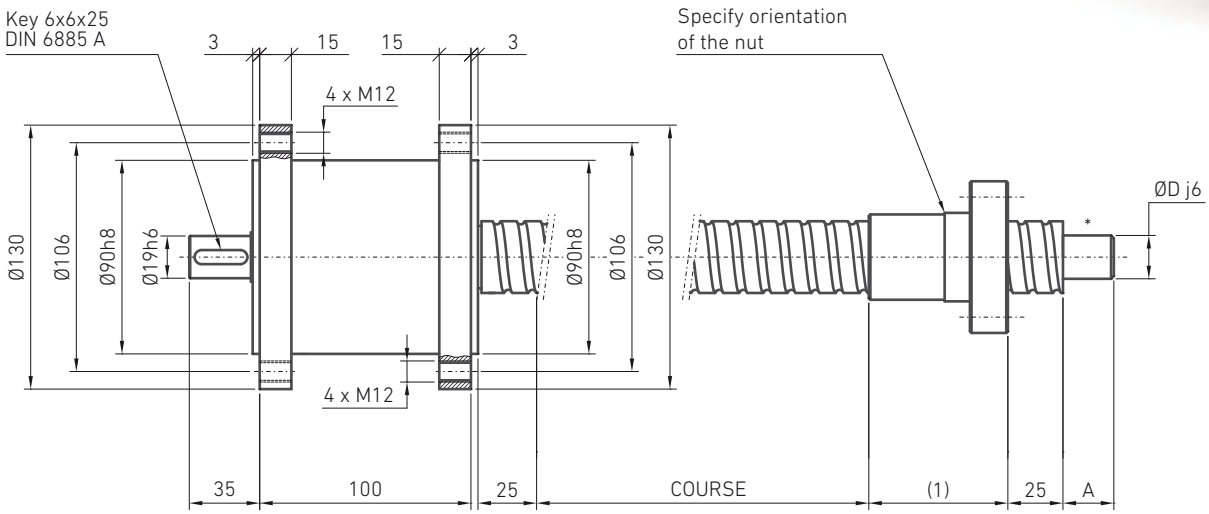

NOTES: (1) See nut dimensions in the corresponding chapter.

Screw diameter and step (mm)	A	øD	Maximum axial strength (kN)	Travel (mm/ revol. input)	Performance (%)	Drive torque, M_D (Nm) F (kN), load to move in dynamic	Stroke weight 0 (kg)	Approx. weight each 100 mm of stroke (kg)
Tr 36x6	25	20	15.5	6	32	(2.96xF)+1.6	2.9	0.67
Tr 40x7	30	25	13.7	7	33	(3.35xF)+1.6	2.9	0.82
KGS 3205	25	20	21.5	5	86	(0.93xF)+1.3	2.9	0.39
KGS 3210	25	20	24.8	10	86	(1.86xF)+1.3	2.9	0.56
KGS 3220	25	20	12.4	20	86	(3.72xF)+1.3	2.9	0.57
KGS 3240	25	20	6.2	40	86	(7.45xF)+1.3	2.9	0.57
KGS 4005	30	25	23.8	5	86	(0.93xF)+1.3	2.9	0.9
KGS 4010	30	25	24.8	10	86	(1.86xF)+1.3	2.9	0.84
KGS 4020	30	25	12.4	20	86	(3.72xF)+1.3	2.9	0.9
KGS 4040	30	25	6.2	40	86	(7.45xF)+1.3	2.9	0.84

... Power required: P_D (kW) = 0,157x M_D (Nm).

... Contact NIASA to ensure the dynamic load does not exceed the critical values indicated, in order to avoid buckling and resonance of the unit. See calculations chapter at the end of the chapter (page 190)."

... The maximum axial force values correspond to the standard NIASA nuts. In some cases they may be increased by using larger, pre-loaded, etc. nuts. Please contact NIASA.

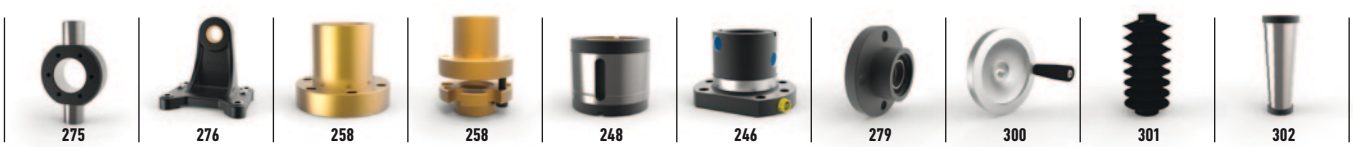

SH40 SCREW SUPPORTS

UP TO 45 kN

TRAPEZ. KGS BALLS

The capacities indicated correspond to the standard input shaft configurations. Higher capacities are available on request.

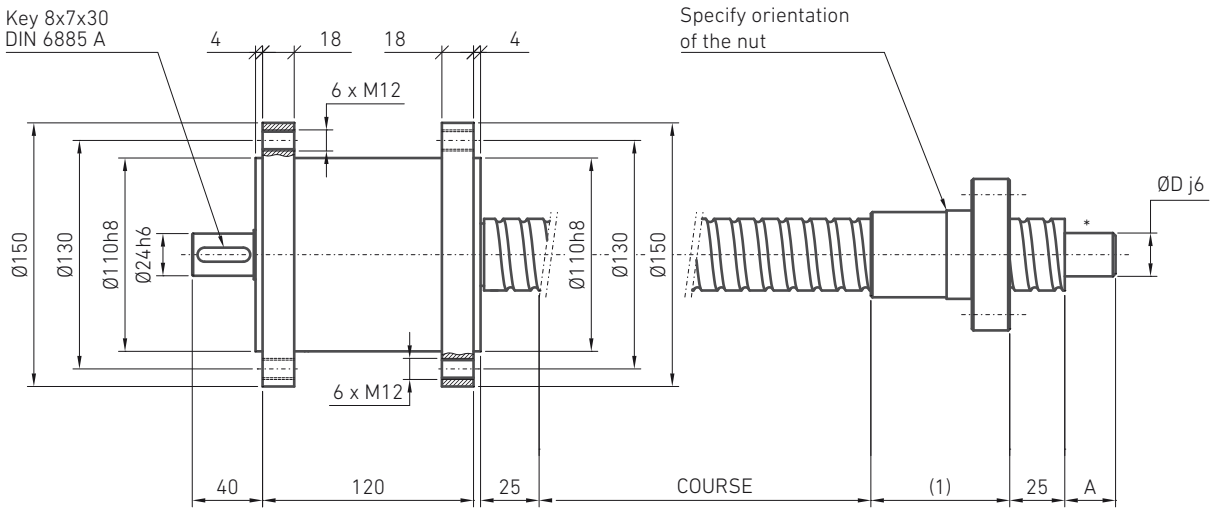

NOTES: (1) See nut dimensions in the corresponding chapter.

Screw diameter and step (mm)	A	øD	Maximum axial strength (kN)	Travel (mm/ revol. input)	Performance (%)	Drive torque, M_D (Nm) F (kN), load to move in dynamic	Stroke weight 0 (kg)	Approx. weight each 100 mm of stroke (kg)
Tr 50x8	40	35	20.6	8	31	(4.06xF)+1.9	5.1	1.31
Tr 60x9	55	45	17.2	9	29	(4.86xF)+1.9	5.1	1.9
KGS 5010	40	35	45.2	10	86	(1.86xF)+1.6	5.1	1.35
KGS 5020	40	35	22.6	20	86	(3.72xF)+1.6	5.1	1.35
KGS 6310	55	45	45.2	10	86	(1.86xF)+1.6	5.1	2.21
KGS 6320	55	45	22.6	20	86	(3.72xF)+1.6	5.1	2.21

... Power required: P_D (kW) = 0,157x M_D (Nm).

... Contact NIASA to ensure the dynamic load does not exceed the critical values indicated, in order to avoid over-heating, buckling and resonance of the unit. See calculations chapter at the end of the chapter (page 190)."

... The maximum axial force values correspond to the standard NIASA nuts. In some cases they may be increased by using larger, pre-loaded, etc. nuts. Please contact NIASA.

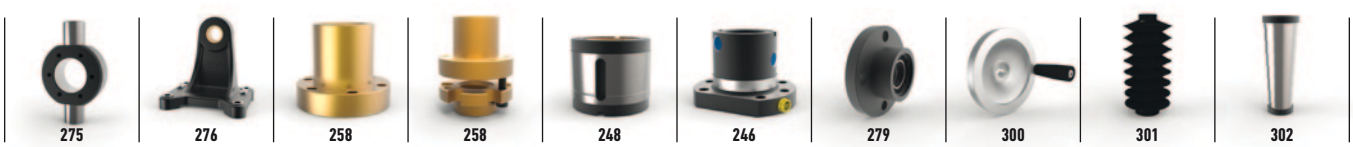

SCREW SUPPORTS
PRODUCT SELECTION

To select the correct screw support, please follow this flow diagram.

If you would like to know the expected service life of a unit for your application, please send the relevant data to the NIASA service department.

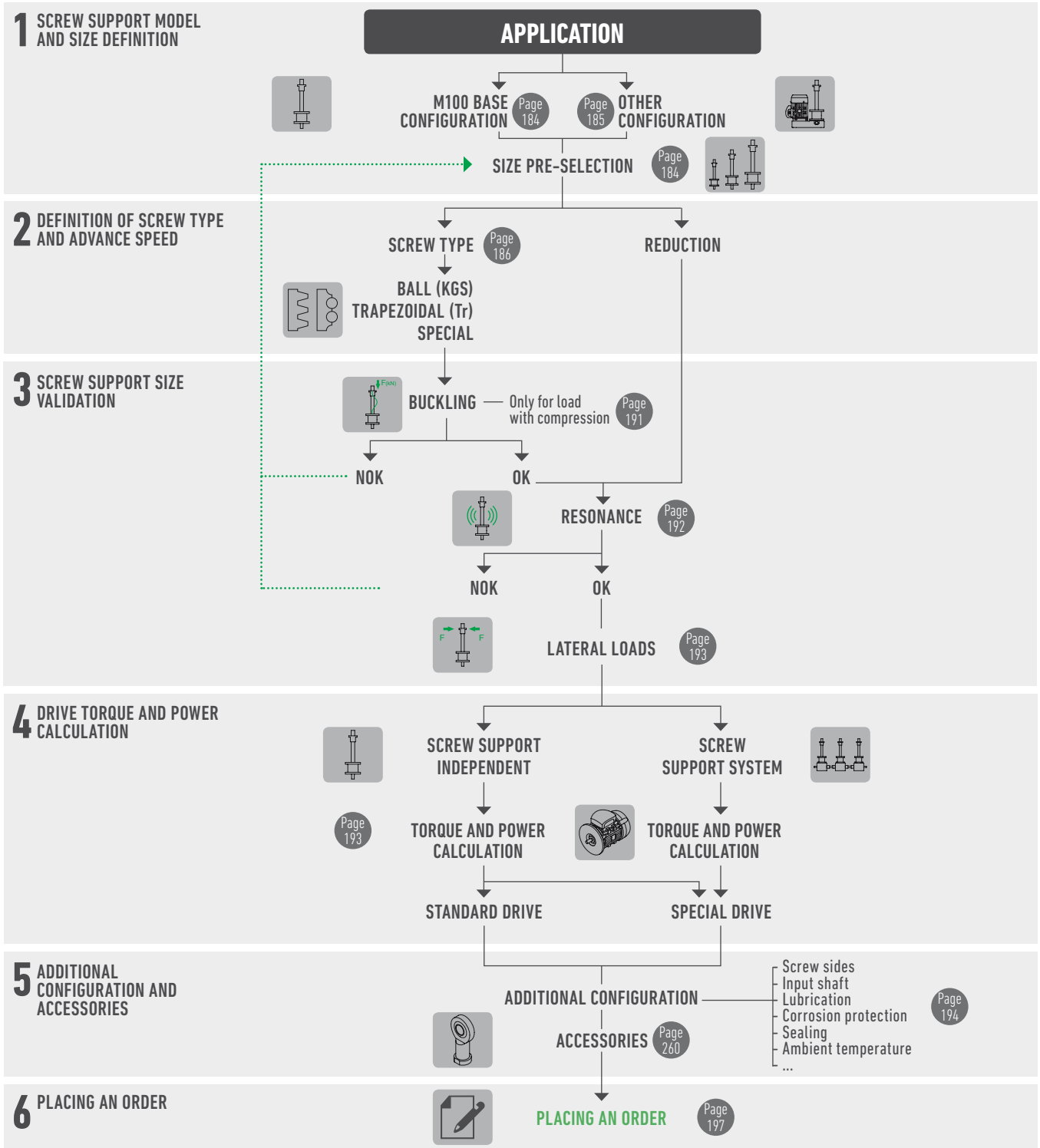

SCREW SUPPORTS
PRODUCT SELECTION

FORCE AND TORQUE ACTING ON A SCREW SUPPORT

F Load elevation at traction and/or compression.
F_L Lateral load on the nut.
V Movement speed of the nut.
F_A Axial load on the input shaft.
F_R Radial load on the input shaft.
M_D Torque on the input shaft.
n Speed on the input shaft.
n_s Screw turning speed.

SCREW SUPPORTS
PRODUCT SELECTION

CRITICAL COMPRESSION BUCKLING LOAD OF A SCREW SUPPORT

When there are compression loads on the screw, it may fail due to buckling, before reaching its static load capacity.

If the critical compression buckling load calculated is lower than the actual compression buckling load applied, select a larger screw support and check its suitability.

Check it using the following steps:

1. COMPRESSION BUCKLING LENGTH AND CORRECTOR FACTOR

Select the length L (mm) and the factor K, to be considered in the buckling critical load calculation. Do this based on the type of support on the sides of the screw support, according to the figures shown on the right.

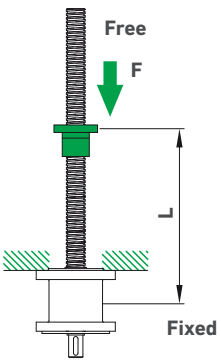

K = 2

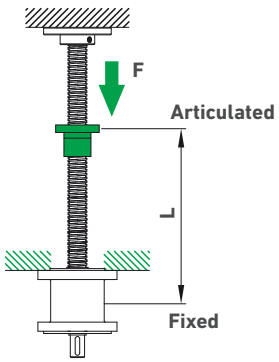

K = 0,7

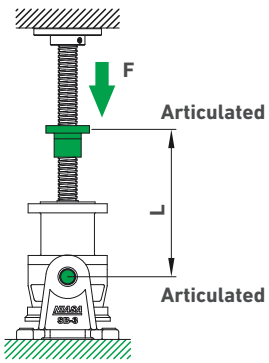

K = 1

2. BUCKLING CRITICAL LOAD

$$F_{crit}\,(kN) = 33.91 \times \frac{d^4}{(K \times L)^2}$$

d Screw core diameter (mm).
L Buckling length (mm).
K Length corrector factor.

IMPORTANT

... In general, the load applied on the screw support, including possible impacts, must not surpass the calculated value.

... The safety factor considered is 3; reconsider this if so considered opportune for the specific application. As a recommendation, when a hypothetical screw support failure may involve injuries to people, multiply the critical load calculated by an additional factor of 0.6 (final safety factor, 5).

d - Screw core diameter (mm).

Trapezoidal screw (Tr)						
20×4	24×5	30×6	36×6	40×7	50×8	60×9
14.5	18.2	22.3	28.7	31.2	40.7	49

Ball screw (KGS)																		
2005	2020	2050	2505	2510	2525	2550	3205	3210	3220	3240	4005	4010	4020	4040	5010	5020	6310	6320
16.9	16.9	16.5	21.9	21.9	21.9	21.9	28.9	27.3	27.9	28.3	36.9	44.1	35.9	36.3	44.1	44.1	57.1	57.1

SCREW SUPPORTS
PRODUCT SELECTION

CRITICAL RESONANCE SPEED OF A SCREW SUPPORT

With reduced diameter and long length screws, there is a risk that there will be considerable vibration on turning if this occurs at speeds close to the first vibration frequency (the second and highest correspond to very high speeds, at which the screws never work). In the worst cases, the screw may break and, additionally, the risk of collapse due to side buckling considerably increases.

For these reasons, it must be checked that the screw support works at lower rotation speeds than resonance speeds. If not, select a screw of a larger diameter and/or reduce its turning speed and/or modify the screw jack end supports.

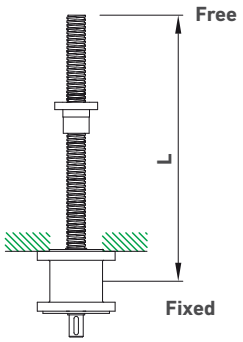

M = 0,34

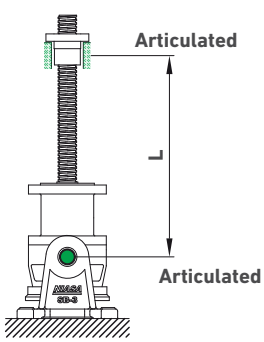

M = 0,97

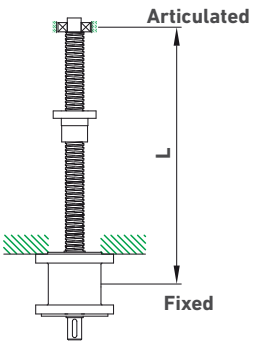

M = 1,51

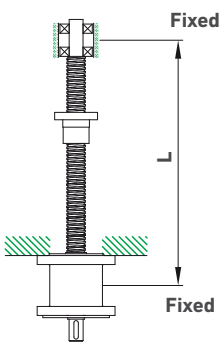

M = 2,19

1. LENGTH, RESONANCE AND CORRECTOR FACTOR

Select the length L and the correction factor M to consider. Do this based on the types of supports on the sides of the screw support, according to the figures shown on the right.

2. MAXIMUM ADMISSIBLE SPEED

$$n_{adm}\ (rpm) = M \times \frac{d}{L^2} \times 10^8$$

d Screw core diameter (mm).
L Length between supports (mm).
M Corrector factor according to supports.

IMPORTANT

... The safety factor considered is 1.25 (maximum admissible speed = 80% of the critical resonance speed).

d - Screw core diameter (mm)

Trapezoidal screw (Tr)						
20×4	24×5	30×6	36×6	40×7	50×8	60×9
14.5	18.2	22.3	28.7	31.2	40.7	49

Husillo a bolas (KGS)																	
2005	2020	2050	2505	2510	2525	2550	3205	3210	3220	3240	4005	4010	4020	4040	5010	5020	6310	6320
16,9	16,9	16,5	21,9	21,9	21,9	21,9	28,9	27,3	27,9	28,3	36,9	44,1	35,9	36,3	44,1	44,1	57,1	57,1

SCREW SUPPORTS
PRODUCT SELECTION

LATERAL LOAD OF A SCREW SUPPORT

If they exist, the lateral loads are supported by guide systems designed for this purpose, in addition to the guide from the body of the screw support itself, so that the screw or the nut exclusively support axial traction/compression loads.

If there are side loads, the life of the screw support will be notably reduced, as there will be premature wear of the screw and the nut, which is also often the origin of faults.

IMPORTANT

- ... If it is essential that the screw support is subject to lateral loads, please contact the NIASA design department for a correct design of the unit.
- ... This includes the horizontal mountings, on which the screw can flex when subject to the action of its own weight.

DRIVE TORQUE AND POWER OF AN INDEPENDENT SCREW SUPPORT

After pre-selecting the suitable screw support for the application, select the drive motor, following the steps below.

1. DRIVE TORQUE

$$M_D\ (N\ m) = \left(\frac{F \times P}{2 \times \pi \times 0{,}95 \times \eta_{DS}} + M_I\right) \times \frac{1}{\eta_{DR} \times i_R}$$

- M_I Drive torque (Nm)
- F Load to elevate in dynamic (kN)
- P Screw pitch (mm)
- M_I Idle torque (Nm)
- i_R Input reduction, see for configurations M205, M501, M505 y M601; i = 1 for M605 and M100-FXX
- $0{,}95$ Body dynamic efficiency
- η_{DS} Screw dynamic efficiency
- η_{DR} Reduction element dynamic efficiency:
  - · M205: η_{DR}= 0.95 (coaxial reducer)
  - · M501: η_{DR} = 0.97 (toothed belt)
  - · M505: η_{DR} = 0,90 (reducer 90º)
  - · M601: η_{DR}, depending on reduc. (worm wheel and shaft)
  - · M605 and M100-FXX: η_{DR}= 1, no reducer

2. POWER REQUIRED

$$P_D\ (kW) = \frac{M_D \times n}{9550}$$

- M_D Drive torque (Nm)
- n Input velocity to the screw support (rpm)

IMPORTANT

- ... In general, it is advisable to multiply the power value calculated for a safety coefficient of 1.3 to 2; the smaller the installation the higher the coefficient
- ... When the load to move is lower than 10% of the elevator's nominal load, consider that value as the load to move.

3. START-UP TORQUE

To calculate the start-up torque, multiply the drive torque by 2.

η_{DS} Screw dynamic efficiency

Trapezoidal screw (Tr)						
20×4	24x5	30×6	36x6	40×7	50×8	60x9
0.38	0.39	0.38	0.34	0.35	0.33	0.31

Ball screw (KGS)
0.9 (for all sizes)

M_I Idle Torque

	SH20	SH30	SH40
Trapezoidal	0.5	1.6	1.9
Balls	0.4	1.3	1.6

IMPORTANT

- ... The values indicated in the tables correspond to the lubrication conditions established by NIASA, for body and screw, and will be reached after a small period of operation.
- ... In the case of low temperatures, these can be reduced considerably.

SCREW SUPPORTS
PRODUCT SELECTION

MAXIMUM TRANSFERABLE TORQUE ACCORDING TO SHAFT/ PARALLEL COTTER PIN (DIN 6885)

The following table shows the maximum transferrable torque for a shaft and its keys. It is considered that the shaft is subject exclusively to torsional forces.

IMPORTANT

... Never subject the input of a screw support to torque over that indicated for its shaft and keys (see plans in the sub-chapter "sizes").

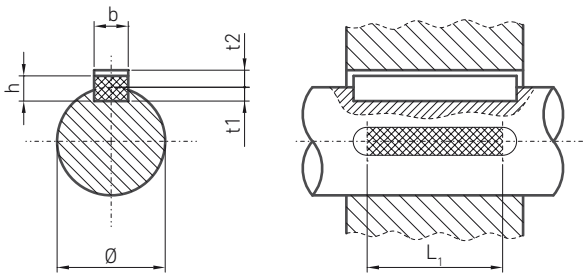

Shaft diameter Ø (mm)	Key dimensions			Maximum transferrable torque, M_D (Nm) Key effective length, L_1 (mm)					
	b x h (mm)	t1 (mm)	t2 (mm)	10	16	20	28	40	50
8 – 10	3 x 3	1.8	1.4	5	9	12	-	-	-
10 – 12	4 x 4	2.5	1.8	9	13	17	-	-	-
12 – 17	5 x 5	3	2.3	15	24	30	42	-	-
17 – 22	6 x 6	3.5	2.8	25	40	50	70	100	-
22 – 30	8 x 7	4	3.3	39	63	78	109	157	195

Material: C45 (1.1191) according to EN 10083-1
Load type: Drive - Uniform /
Load - Light knocks
Assembly: tight
Cycles: >1,000,000
Safety factor: 1.5 - 2.5
IMPORTANT For other conditions, please contact the NIASA technical department

LUBRICATION

The screw support is supplied with class 2, KLUBER ISOFLEX TOPAS L152 lubricant, according to DIN 51818. For high speeds it is better to choose class 1 and heavy loads class 3.

A change of grease type may affect the correct operation of the unit.

Specifications

Synthetic hydrocarbon grease with lithium soap KLUBER ISOFLEX TOPAS L152	
Working temperature	-50 to +150ºC
Density at 20ºC	0.9 kg/dm^3
Cinematic viscosity (s/DIN 51 562)	100 mm^2/s at 40ºC 15 mm^2/s at 100ºC
Dropping point (s/DIN ISO 2176)	>185ºC
Water resistance (s/DIN 51 807/T1)	Level 1

For further information, please contact the NIASA technical department.

A complete cleaning and grease change is recommended after five years.

The greasing interval depends on the type of work and its cycle. It is advisable to lubricate from 30 to 50 hours after start-up and approximately every six months.
It is important to avoid over-lubricating.

A group lubricator is recommended for automatic lubrication of the units. Depending on the type of group lubricator, the lubrication may last up to two years.

See lubrication chapter in accessories.

NIASA supplies its screw supports with the following type of hydraulic greasing mechanism:

... Straight greasing nipple DIN 71412 type B.

... As a greasing nozzle for the nipples, the 515/G – 516/G hydraulic connector is recommended. For its protection and conservation, the use of plastic caps is advised.

The spring screw supports can also be supplied with a brass greasing cap with O-ring.

SCREW SUPPORTS
PRODUCT SELECTION

PROTECTION AGAINST CORROSION, SEALING AND AMBIENT TEMPERATURE

PROTECTION AGAINST CORROSION

Select the environment in which the equipment will work, using the atmospheric corrosion categories classification established in the DIN EN ISO 12944-2 standard (protection against the corrosion of steel structures using painted systems). Also establish the durability required before carrying out the first maintenance of the exterior surfaces (durability does not imply a "time" guarantee).

If the corrosion category is higher than "C3" for your application and/or higher than "average" durability is required, please contact NIASA so that the technical department can select the surface protection system and select the most suitable components.

CORROSION CATEGORY		ENVIRONMENT	
		Outdoors	Indoors
C1	Very low		Buildings with heating and clean atmospheres.
C2	Low	Atmospheres with low levels of pollution. Rural areas.	Buildings with no heating and possible condensation.
C3	Medium	Urban and industrial atmospheres, with moderate SO_2 pollution. Coastal areas with low salinity.	Manufacturing plants with high humidity and some pollution.
C4	High	Industrial areas and coastal areas with moderate salinity.	Chemical and swimming pool industries.
C5-I	Very high (industrial)	Industrial areas with high humidity and aggressive atmosphere.	Buildings or areas with almost permanent condensation and high contamination.
C5-M	Very high (maritime)	Coastal and maritime areas with high salinity.	Buildings or areas with permanent condensation and high contamination.

DURABILITY		
LOW	L	2 to 5 years
MEDIUM	M	5 to 15 years
HIGH	H	More than 15 years

PROTECTION AGAINST THE INPUT OF SOLIDS AND LIQUIDS

NIASA screw supports offer, as standard, an IP54 protection index to prevent solid and liquid particles from entering the inside, which may damage them or reduce their designed service life.

Use the following table, according to the DIN EN IEC 60529 standard, if the level of protection must be higher than that indicated. NIASA supplies, on request, specially designed units to withstand the most aggressive environments.

The protection levels are defined with a code made up of the letters "IP" and two numbers "XY".

LEVEL OF PROTECTION "IP", AGAINST THE INPUT OF ...			
... solid particles: "X"		... liquids: "Y"	
	...		...
5	Protection against dust residues (the dust that may penetrate the inside does not imply incorrect operation of the equipment).	3	Protection against spray water (from angle up to 60° with vertical).
6	Total protection against the penetration of any kind of solid body (sealing).	4	Protection against water splashes (from any direction).
		5	Protection against water streams from any direction with hose.
		6	Protection against sporadic floods (example: tidal wave).
		...	...

AMBIENT TEMPERATURE

Contact NIASA if your unit will be installed in an environment that may reach temperatures below -20°C and/or above +40°C.

NIASA's technical department will prescribe the most suitable materials and sealing components for the specific conditions of the application.

SCREW SUPPORTS
PRODUCT SELECTION

OPTIONAL CONFIGURATIONS

Optionally, NIASA may adapt your screw support, modifying the different parts of it to your preferences.

Some examples are shown below.
See sub-chapter “Placing an order”.

Screw end

O. With no end.
Z. Standard cylindrical end.
S. Special end.

Special configurations

On request, screws with various inputs can be supplied to obtain higher, but eventually reversible, travel speeds. The screw supports can also be supplied with left-thread screws.

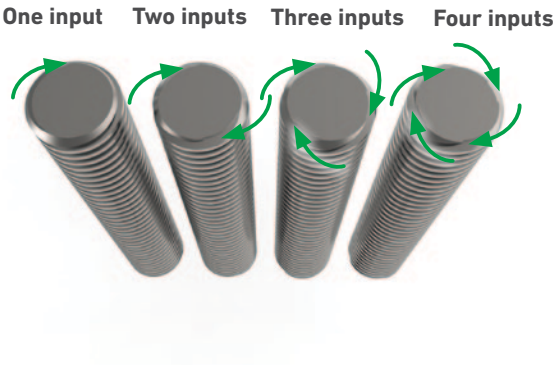

SCREW SUPPORTS

PLACING AN ORDER

01 SIZE
SH20
SH30
SH40

02 CONFIGURATION
M100 Base
M205 In line motoreducer
M501 Parallel drive
M505 For drive at 90°
M601 Motoreducer at 90°
M605 In line motor

03 GEARBOX
Configuration M501
01 Reduction 1:1
02 Reduction 1:2
SR Special reduction

Configuration M205/M601
SR To be defined

Other configurations
00 No reduction

04 EQUIPMENT GENERAL PROTECTION
IPS Standard IP protection level
IPX Special IP protection level

05 SCREW TYPE (DIAMETER x PITCH)
TRS Trapezoidal
KGS Ball

06 SCREW TYPE
With trapezoidal screw
EFM1 Single nut with flange
EFM2 Double nut
EFMS Nut with safety system

With ball screw
KGF1 Ball nut with flange
KGF2 Double ball nut with "preload system" flange
KGM1 Smooth ball nut
KGM2 Double ball nut with "preload system"
KGMF Ball nut with flange +smooth ball nut "preload system"

With trapezoidal or ball screw
0000 No nut

07 STROKE
0000 Equipment usable stroke in mm

08 SCREW END
Z Standard cylindrical end
S Special end
0 With no end

09 SCREW FASTENING ACCESSORY
BPR Screw flange with bearing
FES Special end fastening
000 No accessory

10 NUT ACCESSORIES
KAR Nut flange with trunnion mounts
KAS Special nut flange
000 No accessory on nut

11 SCREW PROTECTION ACCESSORY
FB Bellow type protector
SF Spiral metallic protector
00 No protector

12 DRIVE ADAPTATION
Configuration M100/M505
00 No adaptation
VE Wheel

Configuration M205/M501/M601/M605
MK Default adaptation corresponding to configuration
MS Special adaptation
00 No adaptation

13 MOTOR (IF CONFIGURATION M205/M501/M605)
MK **drive adaptation**
080 Group size
A Power-1 / **B** Power-2

MS drive adaptation
1111 Non-standard drive

Both adaptations
0000 Without drive

14 LUBRICANT
GRA Standard lubricant
GRX Lubricant for low extreme temperatures
GRS Other lubricant

15 LUBRICATION ACCESSORIES
ERT Straight lubricator (standard)
ETP Sealed lubrication cap
AGR Automatic lubricating accessory
000 Other lubricating accessory

16 EQUIPMENT GENERAL COLOUR
RAN Anodized black
RSP Special colour indicated by the customer
000 Not painted

Example	01	02	03	04	05	06	07	08	09	10	11	12	13	14	15	16
	SH30	M205	00	IPS	KGS3205	EFM01	0300	Z	BPR	KAR	FB	MK	GR071A	GRA	ERT	RAZ

SCREW SUPPORTS
ASSEMBLY

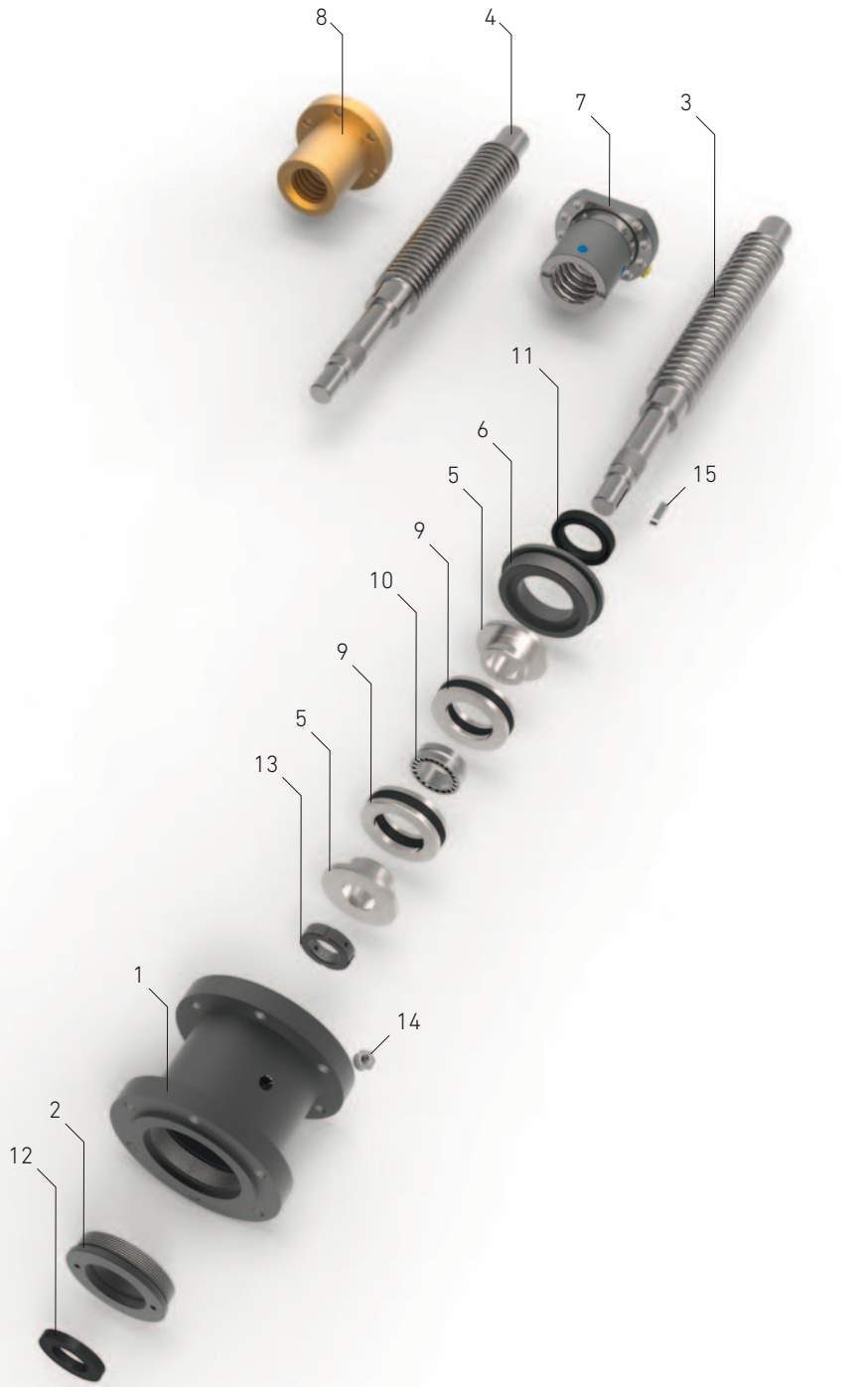

	Name
01	Body
02	Back cap
03	Ball screw
04	Trapezoidal screw
05	Bearing-holder disc
06	Front cap
07	Ball nut
08	Trapezoidal nut
09	Axial bearing
10	Radial bearing
11	Seal
12	Seal
13	Grooved nut
14	Straight lubrication nipple
15	Straight key

SCREW SUPPORTS
SPECIAL CONFIGURATIONS